

New CoolSiC™ MOSFET Easy Modules ANPC topology and AlN

Jens Mielke, Product Marketing Manager Low and Medium Power
Virtual Power Conference, 4-6 May 2021

Easy 1B, 2B and 3B modules: Benchmark packages in the power semiconductor world





The Easy family is the best choice for customers who are looking for a **flexible and scalable** power module solution. We offer the broadest base-plate-less package portfolio with 12mm height. The flexible pin grid system is a perfect fit for **customizing** layout and pinout.

Si & SiC







Advantages of Infineon's Easy Modules

- **No baseplate**, which makes the Easy module a perfect fit for multiple applications
- With its **flexible pin grid**, we enable easy PCB designs and support special application requirements
- Very solid and reliable **pin rivet connection** including our **PressFIT pin** technology
- **Metal mounting clamps** to ensure highest robustness

Copyright © Infineon Technologies AG 2021. All rights reserved.

CoolSiC™ MOSFET for ANPC topology in Easy 2B package with improved Si diodes

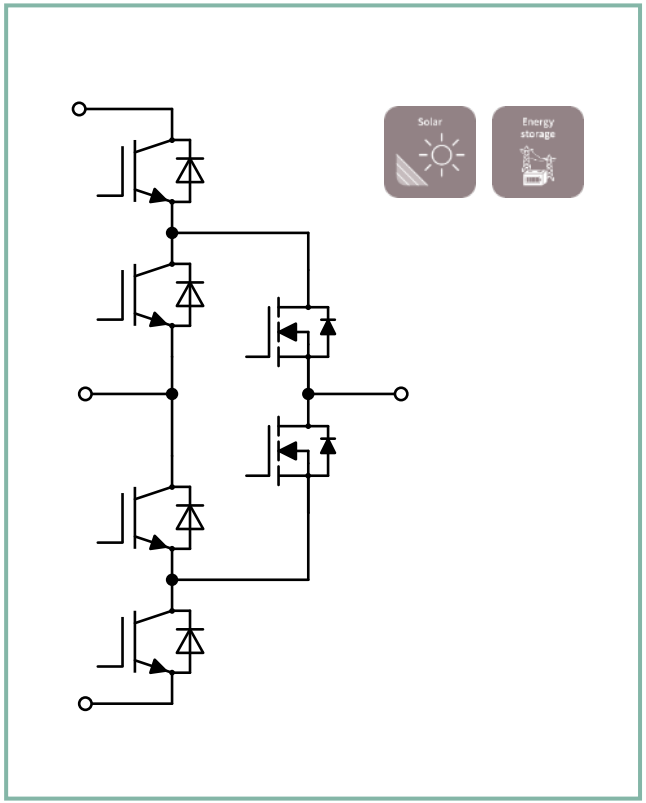

- ANPC allows optimal integration of CoolSiC™ MOSFET (M2, M3)
- T1/T4 are optimized for lowest conduction losses → Latest TRENCHSTOP™ 7 technology
- Increased Si diode current rating which is necessary for ESS → Latest EC7 technology
- Power losses independent of power factor
- Full 1500V_{dc} capability (with 1200V switches)
- Short and clean commutation loops
- Optimized for easy pinout for PCB routing
- Perfect thermal spreading for the MOSFET



Salesname	Description
F3L11MR12W2M1_B74	3-level ANPC Inverter Phase Leg Module

New

BoM	
M2/M3	1200 V CoolSiC™ MOSFET: 11 mOhm
T1/T4/T5/T6	**1200 V IGBT: 100 A TRENCHSTOP™ 7**
D1/D4/D5/D6	**1200 V Diode: 100 A Emcon 7**

Copyright © Infineon Technologies AG 2021. All rights reserved.

Important design considerations for CoolSiC™ 1200 V Easy module with ANPC module for solar and ESS application

Design considerations

- "Long commutation loop"
  → module internal layout needs to be low inductive
- Highest losses generated by M2/M3
  → R_{thjh} from major importance
- Si IGBT's T1/T5/T6/T4 are switched with low frequency
  → static losses matters
- ESS application require currents flows in all direction
  → strong Si diodes

New

Layout

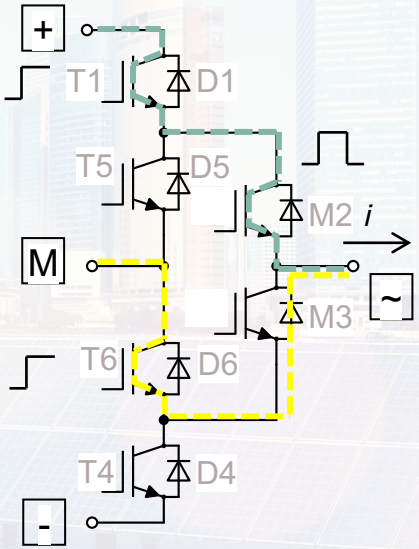

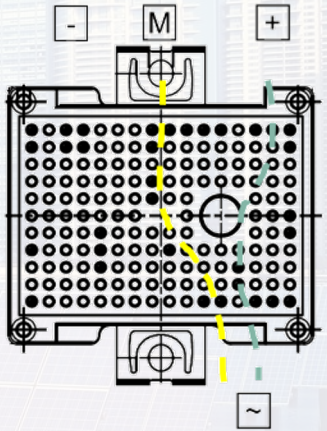

Copyright © Infineon Technologies AG 2021. All rights reserved.

Easy CoolSiC™ ANPC module supports the entire cos φ range

$T_{vj,op}$ vs. cos φ

- DC-link: 1400V
- f_{sw}: 42kHz
- I_{rms}: 77A
- T_h: 80°C

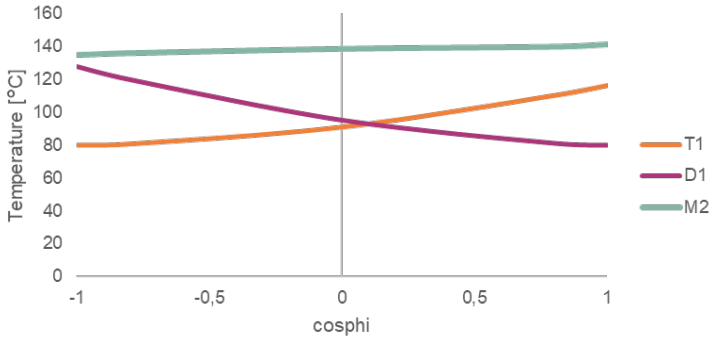

Topology

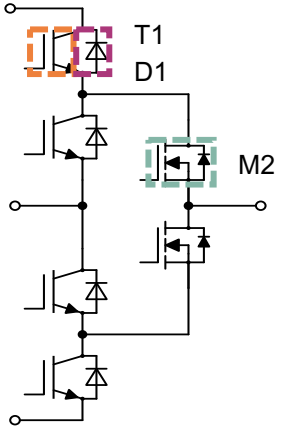

New

- Simulation under typically application requirements
- Output power: 75 kW per module at 600V output voltage while the junction temperatures of the SiC MOSFETs are ~140°C
- The ANPC modules supports the entire cos φ

Copyright © Infineon Technologies AG 2021. All rights reserved.

Up to 150 kW output power using CoolSiC™ MOSFETs in ANPC topology

Simulation Inputs

- V_{DC} = 1400 V
- f_{sw} = 42 kHz
- **$T_{vj,op}$ = 140°C**
- cos(phi) = 0,8
- Modulation Index = 1
- T_h = 80°C
- T_{amb}= 45°C

Maximum output power

+SiC



Approach:

- Output power capability under typical application conditions
- Typical conditions for solar & ESS

New

Infineon's CoolSiC™ MOSFET solution:

- 150 kW higher output power @ 600V output voltage
- 77A I_{rms} current per 11mΩ CoolSiC™ MOSFET → highest utilization

Copyright © Infineon Technologies AG 2021. All rights reserved.

New ceramic material brings significant R_{thJH} improvement for even more power

New

Advantages by using AlN ceramics

Typical R_{thJH} Distribution

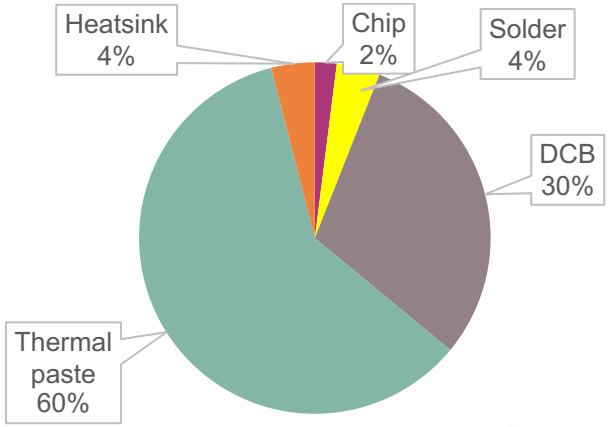



Thermal **conductivity** of DCB material:

- Al2O3 λth: 24W/mK
- AlN λth: 170W/mK

Thermal **paste**:

- Minimization of the cavity between module and heat sink by thicker AlN ceramic

→ Reduction of the layer-thickness of the thermal interface material

Copyright © Infineon Technologies AG 2021. All rights reserved.

New ceramic material brings significant R_{thJH} improvement for Easy power modules

Facts

- Prototypes available
- Data sheets available

- **Mass production since Q1 2021**

Target applications



… and more

Lead types

Rdson	EasyDUAL™
[mOhm]	1200V Halfbridge
11	FF11MR12**W1**M1_B70
6	FF6MR12**W2**M1_B70

R_{thJH} improvement of 40% for …

New

- … more output power
- … lower junction temperatures
- … longer lifetime
- … less cooling effort



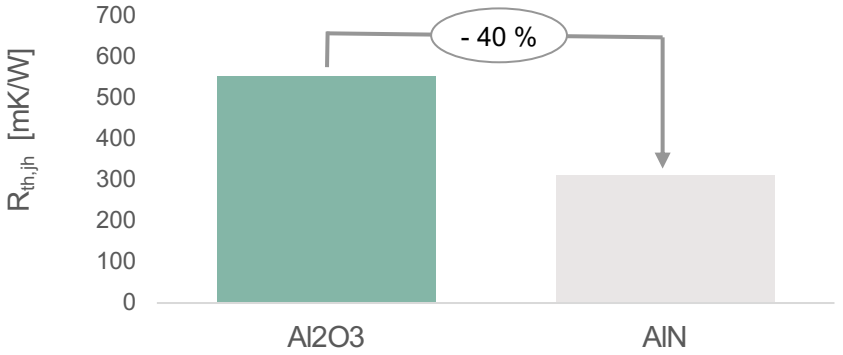

Copyright © Infineon Technologies AG 2021. All rights reserved.

New ceramic material brings significant R_{thJH} improvement for Easy power modules

AI203	
FF11MR12W1M1_B11	
R_{thJH}	0,553 K/W

AI203 + TIM	
FF11MR12W1M1P_B11	
R_{thJH_max}	0,480 K/W

AIN	
FF11MR12W1M1_B70	
R_{thJH}	0,311 K/W

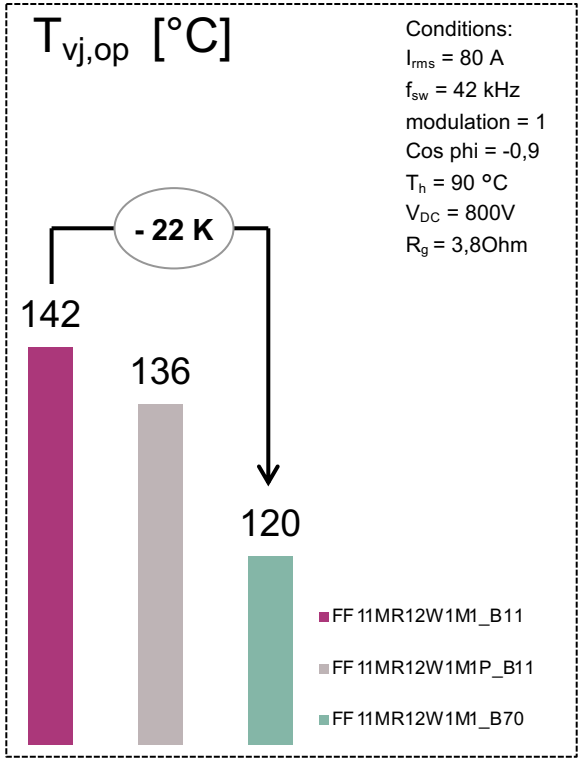

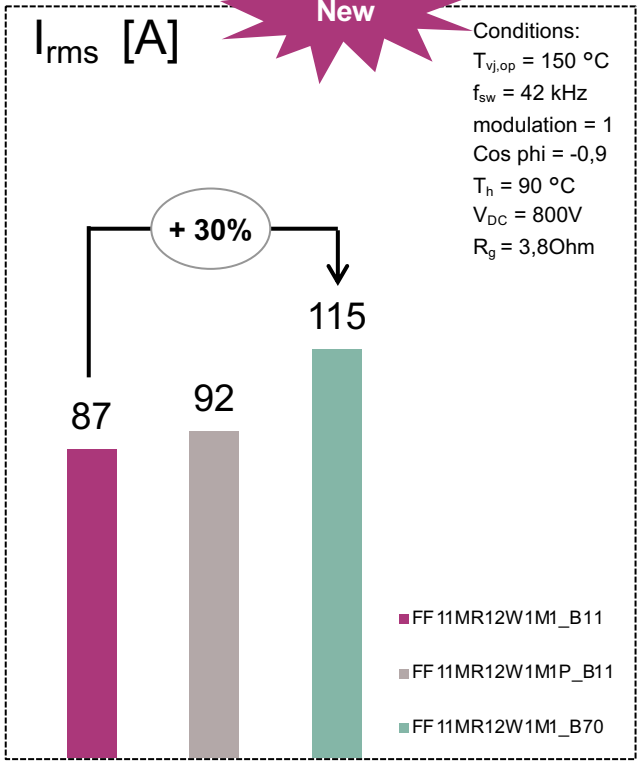

Copyright © Infineon Technologies AG 2021. All rights reserved.

Easy modules with 1200 V CoolSiC™ MOSFET and high performance ceramic for higher power ratings

Target Applications

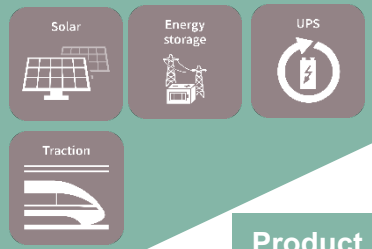

Portfolio extension Easy modules with CoolSiC™ MOSFET

Product	R_{DS_on}	Topology	Technology	Package	Status
F3L11MR12W2M1_B74	11 mΩ	Three Level	M1	EasyPACK™ 2B	Mass Production
FF11MR12W1M1_B70	11 mΩ	Halfbridge	M1	EasyPACK™ 1B	Mass Production
FF6MR12W2M1_B70	6 mΩ	Halfbridge	M1	EasyPACK™ 2B	Mass Production

+SiC Silicon Carbide

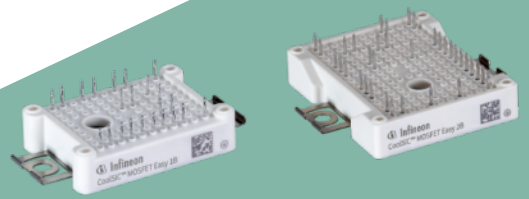

Copyright © Infineon Technologies AG 2021. All rights reserved.

CoolSiC™ MOSFET 1200 V module portfolio

Target Applications



…and more

RDson [mΩ]	1200 V half-bridge	1200 V SixPACK	1200 V 3-level
45	FF45MR12W1M1_B11	FS45MR12W1M1_B11 MADK Board	
23	FF23MR12W1M1(P)_B11 EVAL Board		
11	FF11MR12W1M1(P)_B11 EVAL Board FF11MR12W1M1_B70 New		F3L11MR12W2M1_B74 New
8	FF8MR12W2M1(P)_B11		
6	FF6MR12W2M1(P)_B11 FF6MR12W2M1_B70 New FF6MR12KM1(P)		
3	FF3MR12KM1(P)		
2	FF2MR12KM1(P)		

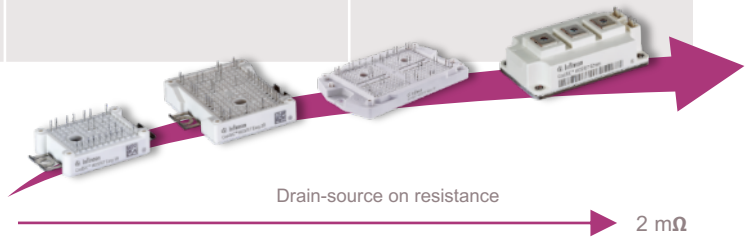

Orderable, registerable and available now

B11 = PressFIT Pin
B70 = AlN ceramic
P = Thermal Interface Material (TIM)
E = Common Emitter

Copyright © Infineon Technologies AG 2021. All rights reserved.

+SiC Silicon Carbide

Easy modules are a perfect fit for standard & **customized solutions**, particular in combination with our current chip set for **industrial applications**, like solar, EV Charger, ESS and many more

Introduction of a new Easy ANPC module with 1200 V SiC MOSFET chips

High performance ceramic for Easy modules available

Product launches to support fast growing markets which have a high demand for higher power ratings



Infineon has the right solution for every fast switching application!

Copyright © Infineon Technologies AG 2021. All rights reserved.



Part of your life. Part of tomorrow.